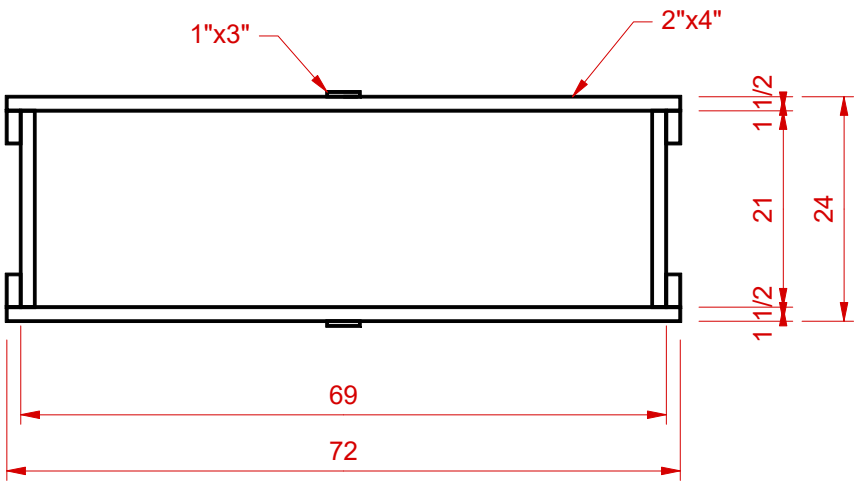

3/8" Plywood or any other
material as desired for shelves